NCL31000ASGEVB User Guide

EVBUM2798/D

ON Semiconductor®

www.onsemi.com

EVAL BOARD USER'S MANUAL

Introduction

This guide explains how to use the NCL31000ASGEVB with an USB to I2C interface or with an arduino microcontroller board of choice to evaluate the product.

Board Connections

The NCL31000ASGEVB (Figure 1) is an arduino shield form factor containing a single NCL31000MNITWG LED driver. These few steps are required to get started.

1. Connect a lab power supply from 24 V to 57 V to the DC IN connector. A reverse polarity protection circuit is in place to protect the system against faulty connections.
2. Connect a LED string rated for 16 V to 42 V to the LED connector.
3. Optionally, connect an NTC from the LED module to the TLED connector to measure the LED board temperature. If doing so, remove R24 and short R33, see section LED Power.
4. Connect a microcontroller to the arduino interface connectors and develop firmware to evaluate the product.
5. An alternative for step 4 is to use an USB to I2C interface to send commands from the PC to NCL31000ASGEVB.

Micro−Controller Interface

The NCL31000 hardware requires at least a GND connection and an I2C or SPI connection to control the main functions of the chip. The SCL/SDA and connections are designated to Arduino pins D15 and D14. All Nucleo boards can be programmed to route an I2C peripheral to these pins. The default I2C address is 0x52. This is configurable with zero−ohm resistors.

The NCL310xx devices are internally hardwired to use either SPI or I2C. For now, NCL31000ASGEVB is only available with the I2C version populated. Note that the SPI slave in NCL310xx only supports Mode 2.

For Visual Light Communication, preferably a DAC connection or alternatively 2 x PWM connections are needed. See section Dimming and VLC − YellowDot. The DAC connection is not specified by the Arduino hardware interface and different microcontroller boards connect the DAC to different pins. By default, the NCL31000ASGEVB assumes the DAC can be connected to A2 or D13 (see Schematic). This is compatible with the ST Nucleo boards.

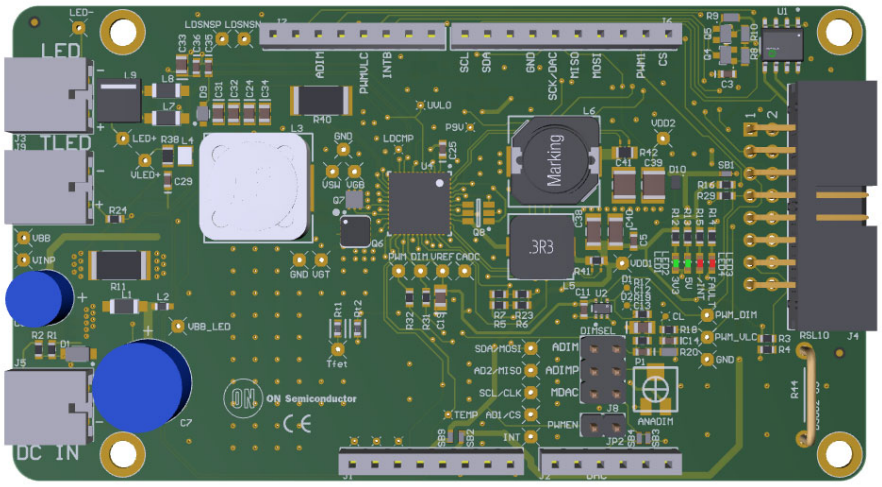

Figure 1. NCL31000ASGEVB

© Semiconductor Components Industries, LLC, 2021

DC−DCs

Two DC−DC supplies are available to supply different parts of the application. VDD1 is a fixed 3.3 V supply rated to deliver up to 150 mA and VDD2 is configurable, but on the EVB it is set for 5 V. It can source up to 500 mA. VDD1 and VDD2 are not connected to the arduino interface so VDD1 does not by default supply the arduino board because the arduino interface standard does not provide a 3V3 supply connection. Some arduino micro−controller boards can be adjusted so that they can be supplied with 3V3. For example, the nucleo boards normally need one or more solder bridge configuration changes to be able to get powered from a 3V3 supply. See the VDD1_EXT connection in the schematic. The VDD2 cannot be used to supply the micro−controller since it has to be enabled first in a register after startup. Thus, by default, without making any changes to the hardware, the micro−controller board has to be supplied by the USB connection or another supply.

LED Power

This EVB has a significant copper cooling plane for the top fet of the LED driver. It is therefore possible to drive LED loads up to 100 W with this EVB. 2 NTC's are placed onto the cooling plane to measure the plane's temperature to estimate the top fet junction temperature. One NTC is connected to the TLED metrology measurement pin so that the temperature can be monitored over I2C. The second NTC is electrically connected on one side to the copper plane and one side floating so that a multimeter can measure the voltage over the NTC. This is an alternative NTC sensing method. To measure the NTC voltage from the LED board, make the connection to the TLED connector and solder R24 and remove R33 to disable the top fet measurement.

It is best to replace the sense resistor with 50 mΩ or place a second resistor in parallel to reduce the temperature of the sense resistor and the dissipation when going above 1.6 A LED current or so. See the Thermal section for more info.

Dimming

To make dimming possible, enable the LED driver by setting the LED_EN bit in the CTRL register and close the PWM_EN jumper on the EVB.

There are 5 ways to dim the LEDs. The selection for the first three methods is made with the DIMSEL jumpers. See Figure 2.

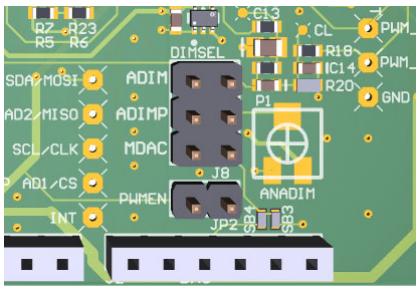

Figure 2. Dimsel

- MDAC: DAC in MCU connected to DIM pin (Arduino: A2 or D13)
- ADIM: Analog dimming. A low−pass filtered DC signal converted from a PWM signal from MCU (Arduino: D5)
- ADIMP: potmeter on the EVB connected to DIM pin

The others are (DIMSEL does not matter):

- PWMDIM: PWM dimming. PWM from MCU directly to PWM pin (Arduino: D9)
- INTDIM: The internal 7−bit DAC

INTDIM

The internal 7−bit DAC can be used to DIM the LEDs. With 128 dimming steps in the entire range this method provides a coarse method to dim the LEDs. The lowest current value is about 10 mA if a 100 mΩ sense resistor is used. If deep dimming or VLC is not needed this method may suffice. No extra hardware is needed, only the I2C or SPI interface.

ADIM

The ADIM signal can dim the LEDs with a higher accuracy and precision compared to the other methods. It is possible to accurately dim down to about 0.1% of the maximum range. The accuracy at these low dimming values is dominated by the relative offset error, which is no more than a few mV's or approximately 0.1% of VREF. The precision or resolution is defined by the amount of steps the duty−cycle has in the PWM period. For example, if an 8−bit timer is used, 256 steps are available. PWM oversampling can increase this number.

The ADIM method is an alternative to the INTDIM method. Switching between these methods is possible by controlling the INTDIMEN bit. To use the ADIM method, the micro−controller must provide a PWM signal with a frequency preferably between 1 to 10 kHz. The duty−cycle defines the dim value. This PWM signal is filtered heavily and the resulting average value is presented to the DIM input. The resulting LED current is thus a constant current, not a PWM'ed current. This ADIM or the MDAC method can use VLC. Next to low pass filtering the PWM signal, the filtering circuit also couples the VLC signal on the DIM signal. To make use of this method configure the DIMSEL jumper for ADIM and pull the PWM pin high by closing the PWM jumper.

PWMDIM

The PWMDIM does not provide the widest dim range or best accuracy and should not be used as the primary dim method, but it can be used on top of the ADIM method to achieve hybrid dimming and dim to even lower LED currents. For example, set ADIM to 220 mV and apply a PWM signal of 1 kHz and 25% duty−cycle to achieve an average internal DIM voltage of:

200 mV + 0.25 * 20 mV = 205 mV

Important to note is that the measured LED current from the ILED metrology register is not valid when using PWMDIM. This is because the ADC sampling is in the range of 100 ms and the PWMDIM frequency is the range of 400 Hz and higher and thus oversampling is not possible and no averaging can be done.

MDAC

This method uses the DAC in the micro−controller, if available. This method can dim the LEDs and still have the possibility to use VLC. To use the DAC, route it to A2 or D13 on the Arduino interface (possible for Nucleo−64 or Nucleo−144 connections) and configure DIMSEL jumper for 'MDAC'. When using the DAC you cannot use the SPI_CLK and thus only I2C is an option. One exception is the Nucleo−64 boards, which connect the DAC to A2 on the Arduino interface. Also pull the PWM pin high by closing the PWM jumper.

ADIMP

The potmeter on the EVB can be used to apply a voltage on the dim pin and manually control the LED current. To make use of this method configure the DIMSEL jumper for ADIMP and pull the PWM pin high by closing the PWM jumper.

Status Indication

The boards have four LEDs. Two green LEDs to indicate the 3V3 (VDD1) and 5 V (VDD2) supplies are active. Note that VDD1 must be active on power up. This is a good check to see if the board (supplies) is operational. VDD2 is disabled at startup and can be enabled in a register. The orange INTB LED is active if the INTB line is low. This is the case when a fault bit is active or became active since the last read. The red FAULT LED can be used by the micro−controller.

VLC − YellowDot

The YellowDot program is a luminaire certification program that allows manufacturers to test and certify that their LED luminaires are interoperable with Signify's indoor positioning technology. A key aspect of YellowDot ready LED drivers is that data can be transmitted by modulating data onto the LED current and thus in the light output. The NCL310xx products are Yellow−dot compatible. This means that it is possible to modulate the LED current conform to the Yellow–dot specification. Contact Signify for more information about this program and the technical requirements. Modulating the data on the DIM pin can be done either by using the MDAC (preferred) method or by using the ADIM method together with the PWMVLC signal.

VLC with MDAC

The DAC voltage controls the DIM voltage directly. When no data is transmitted, it should regulate a stable DC value to provide a stable LED current. When transmitting data, the DAC voltage swings between the 3 voltage levels at the symbol rate.

VLC with ADIM + PWMVLC

An alternative for the DAC is to use 2 PWM signals. One is for setting the DC dim value using the ADIM method and the other PWM signal is connected to the PWMVLC signal. The PWMVLC data is coupled onto the DIM signal. The frequency must be about 200 kHz or more. A digital one is represented by a duty−cycle of 50% + k. A digital zero is represented by a duty−cycle of 50% − k. The resulting signal is a 200 kHz PWM signal for which the duty−cycle varies between 2 values (0.5 − k and 0.5 + k). The symbol rate of the VLC signal (typ: 4 kHz) is defined by the rate at which the duty−cycles alternate. The 'k' value defines the amplitude of the VLC signal. After filtering the resulting

signal is a 4 kHz AC signal with a given amplitude. This signal is capacitively coupled on the DIM signal so for this to work the ADIM dimming method must be used to define the DC DIM level.

Thermal

The highest temperatures on the board are to be expected in the top fet of the LED driver and in the sense resistor of the LED driver.

LED Sense Resistor

It is best to keep the sense resistor value as small as possible without impacting the dynamic dimming range too much. Keep the power dissipation in the 6430 package below 400 mW. Ideally 200 mW. It is possible to add a sense resistor in parallel to spread the dissipation (1% or better). For example, a 120 mΩ 6430 package with a 0.62 Ω 3216 package in parallel gives 100 mΩ and a better spreading of heat.

Thermal Plane

The power dissipation in the top fet is dominated by switching and conduction losses. The device used on the board is carefully selected to achieve the lowest power dissipation. Still, mainly depending on the input voltage, switching frequency and during highest current, the power dissipation (Pt) can reach up to about 1.2 W in this device. A copper cooling plane is required to transfer enough heat to the environment to keep the temperature of the fet in 4 check. The cooling plane is about 3 x 2 cm. It is present on 3 layers: top, bottom, and one internal layer. The remaining internal layer is reserved for a ground plane. The copper extends to the edges of the board. The layers are interconnected by via's. See Figure 3. The red area is the copper plane on the top copper. This copper plane is a bit overkill for applications that do not require 90 W or more.

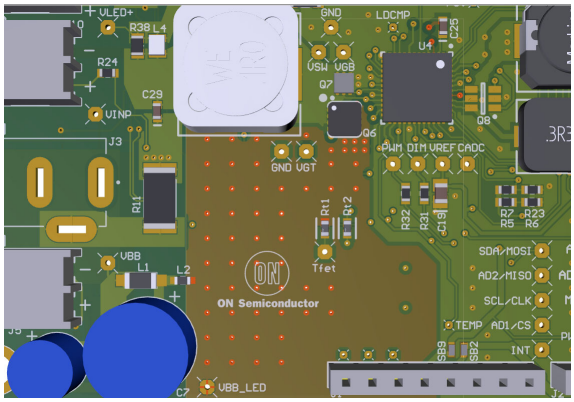

Figure 3. Copper Plane

Erratum

Boards with version «ncl31000as» and date «25/03/2021» had a mistake in the arduino pinout. Headers J6 and J7 are swapped in the layout and do not correspond with the correct arduino placement. Modifications have been made to these connectors so that the board can still be plugged on top of an arduino mcu. 5 pins have been cut and 3 connections rewired.

Because of this patch the arduino shield fits an arduino microcontroller board and it can be used as expected except for the PWM1 pin which is not available due to this patch.

SCHEMATIC

Reverse polarity protection + overvoltage protection

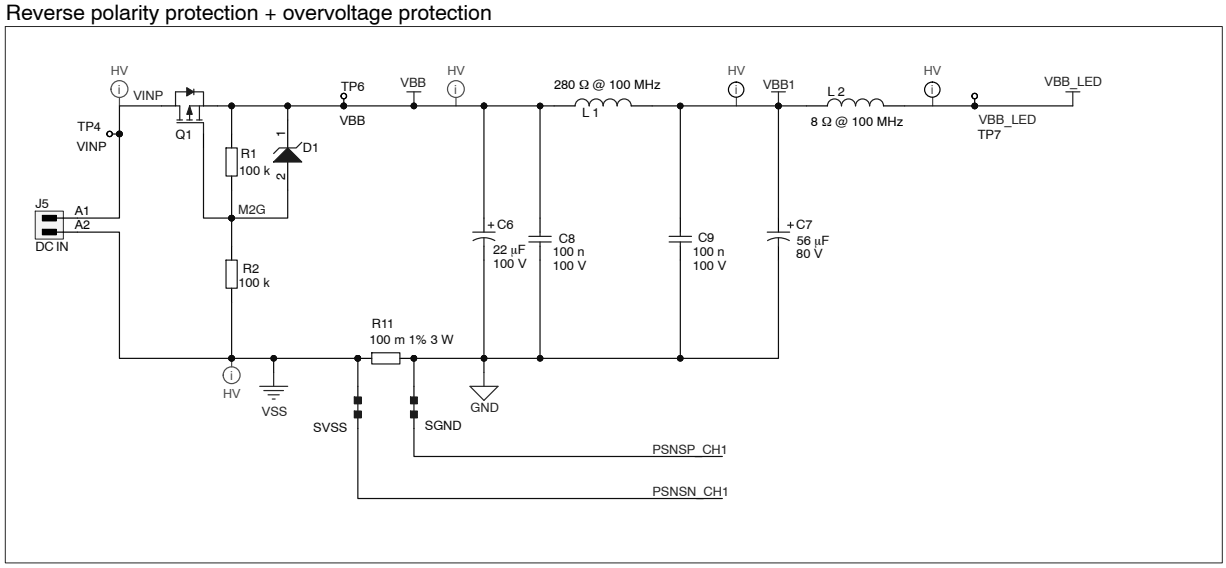

Arduino headers

Board pin−out

Arduino pin−out

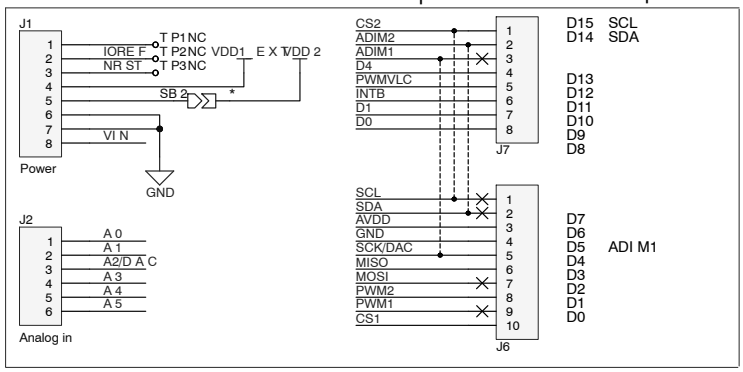

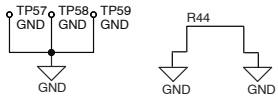

Headers J6 and J7 are swapped in the layout and do not correspond with the correct arduino placement. Modifications have been made to these connectors so that the board can still be plugged on top of an arduino mcu. The PWM1 pin is not available due to this patch.

RSL10 headers

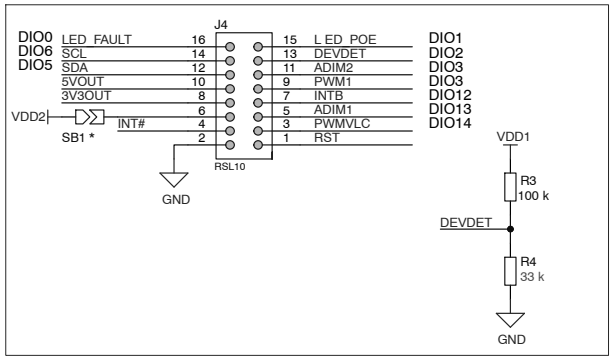

Strata EEPROM & HOT PLUG Detection

Pulse INT# on plug event

34 k, 1 µF = 50 ms negative pulse

System can also mask INT# for level based interrupt.

Pull gate of first FET low to disable pulse INT# events.

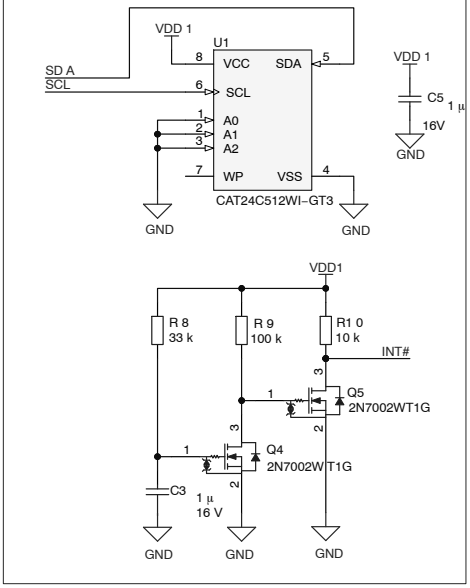

Status

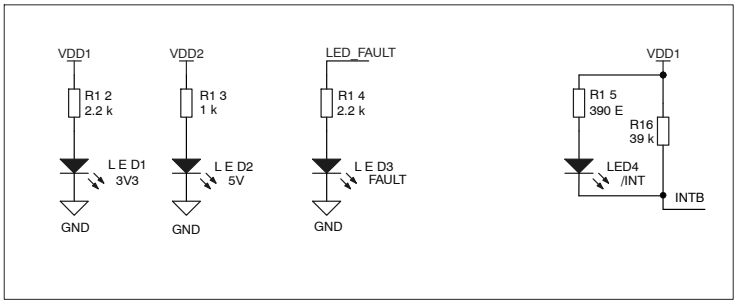

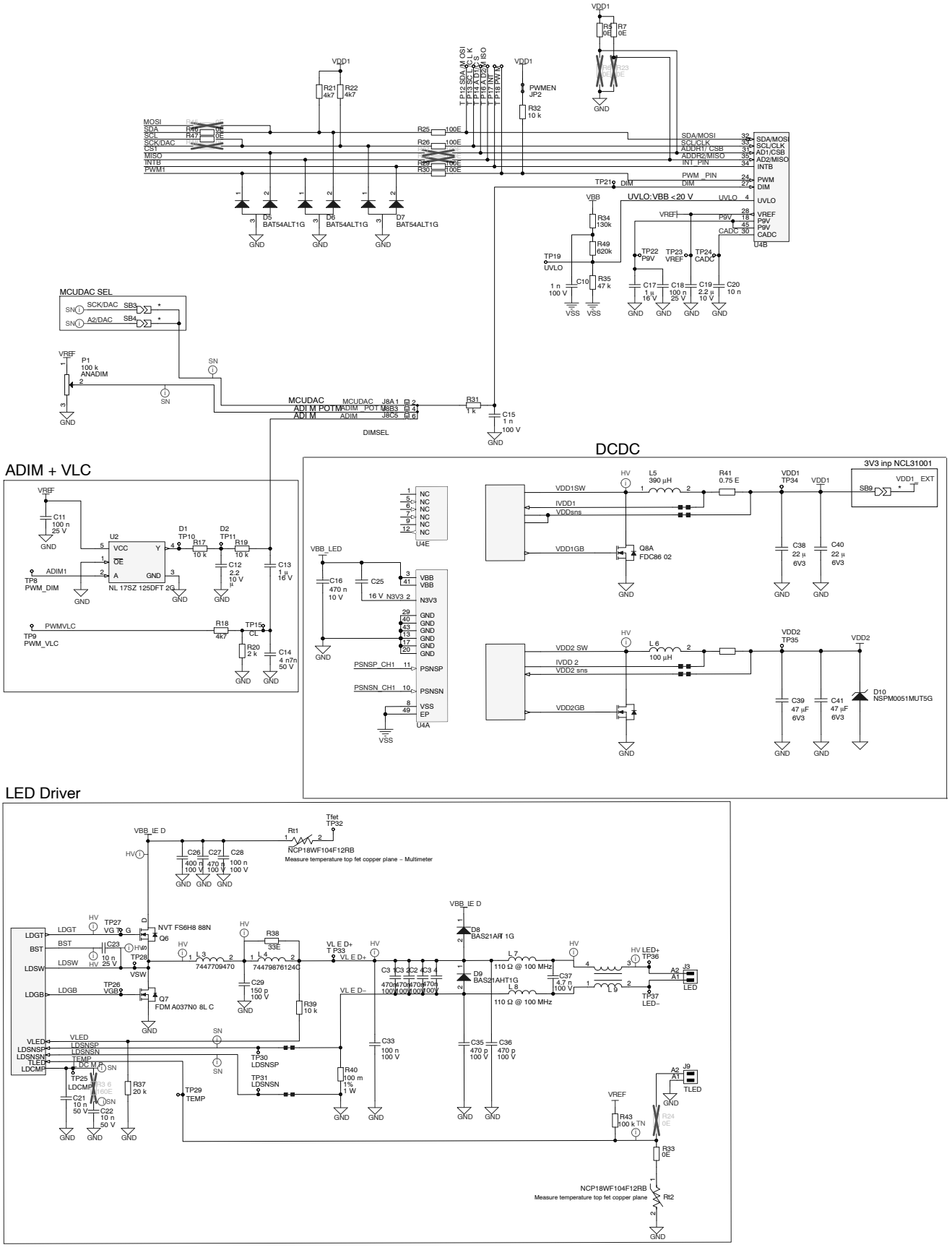
ADIM + VLC
DCDC
LED Driver
MCUDAC SEL
DIMSEL
UVLO:VBB <20 V
3V3 inp NCL31001
NCP18WF104F12RB
Measure temperature top fet copper plane – Multimeter
NVT FS6H8 88N
FDM A037N0 8L C
NCP18WF104F12RB
Measure temperature top fet copper plane

Table 1. BILL OF MATERIAL

Qty	Designator	Manufacturer	Part No.	Value	Footprint	Description
1	D1	ON Semiconductor	MMSZ5245BT1G		ONSC−SOD−123−2−425−04_V	Zener Voltage Regulator, 500 mW, 2−Pin SOD−123, Pb−Free, Tape and Reel
1	J1	Samtec	SSQ−108−03−F−S		SSQ−108−03−X−S	Board−To−Board Connector, 2.54 mm, 8 Contacts, Receptacle, Through Hole, 1 Rows
1	J2	Samtec	SSQ−106−03−G−S		SSQ−106−03−X−S	Board−To−Board Connector, 2.54 mm, 6 Contacts, Receptacle, Through Hole, 1 Rows
1	J3	Weidmueller	1862960000		SC_SMT_3_81_90G_02	OMNIMATE Signal − series BC/SC 3.81
1	J4		61201621721		61201621721	Male Box Header WR−BHD, THT, Angled, pitch 2.54 mm, 16 pins
1	J5	Weidmueller	1862960000		SC_SMT_3_81_90G_02	OMNIMATE Signal − series BC/SC 3.81
1	J6	Samtec	SSQ−110−03−G−S		SSQ−110−03−X−S	Board−To−Board Connector, 2.54 mm, 10 Contacts, Receptacle, Through Hole, 1 Rows
1	J7	Samtec	SSQ−108−03−G−S		SSQ−108−03−X−S	Board−To−Board Connector, 2.54 mm, 8 Contacts, Receptacle, Through Hole, 1 Rows
1	J9	Weidmueller	1862960000		SC_SMT_3_81_90G_02	OMNIMATE Signal − series BC/SC 3.81
1	L3		7447709470		WE−PD−XXL	SMD−Shielded Power Inductor WE−PD, L = 47.0 μH
1	L4	Wurth Electronics	74479876124C		SMD 0806	Power Multilayer Inductor WE−PMI, L = 0.24 μH
1	L5	Wurth Electronics	744777239		WE−PD 7345	SMD−Shielded Power Inductor WE−PD, L = 390 μH
1	L6	Wurth Electronics	7447714101		WE−PD 1050	SMD−Shielded Power Inductor WE−PD, L = 100 μH
1	U1		CAT24C512WI−GT3		FP−751BD−01−IPC_C	IC EEPROM 512K I2C 1 MHZ 8SOIC
1	U2	ON Semiconductor	NL17SZ125DFT2G		FP−419A−02−MFG	IC BUFFER NON−INVERT 5.5 V SC88A
1	U4	ON Semiconductor	NCL31000		485EP	
2	D8, D9	ON Semiconductor	BAS21AHT1G		ONSC−SOD−323−2−477−02_V	Low Leakage Switching Diode, 2−Pin SOD−323, Pb−Free, Tape and Reel
2	Q4, Q5	ON Semiconductor	2N7002WT1G		ONSC−SC−70−3−419−04_V	Small Signal MOSFET, 60 V, 340 mA, Single, N−Channel, 3−Pin SC70, Pb−Free, Tape and Reel
2	Rt1, Rt2		NCP18WF104F12RB		FP−NCP18−0_15−IPC_C	NTC Thermistor for Temperature Sensor, 0603, 100 kO, 1%, 0.032 mA, 5 V
3	D5, D6, D7	ON Semiconductor	BAT54ALT1G		ONSC−SOT−23−3−318−08_V	Schottky Barrier Diodes, 3−Pin SOT−23, Pb−Free, Tape and Reel
5	SB1, SB2, SB3, SB4, SB9				1005−SB−2	Solder bridge
5	R5, R7, R33, R46, R47		CRG0603ZR	OE	RESC1608L	Resistor
1	R42		RL1220S−R20−F	0.2E	RESC2012N	Resistor

Table 1. BILL OF MATERIAL (continued)

1	R41		RCWE0603R750FKEA	0.75E	RESC1608N	Resistor
2	R13, R31		CRGCQ0603F1K0	1 k	RESC1608L	Resistor
1	C10	TDK	CGA3E2X7R2A102M080AA	1 n	CAPC1608L	Capacitor
1	C15	TDK	CGA3E2X7R2A102M080AA	1 n	CAPC1608L	Capacitor
5	C3, C5, C13, C17, C25	TDK	C1608X7R1C105K080AC	1 μ	CAPC1608L	Capacitor
1	R44	Harwin	D3082−05	2 pins	Groundbar D3082−05	2 (1 x 2) Position Shunt Connector Non−Insulated 0.400 (10.16 mm) Gold
1	R20		CPF0603F2K0C1	2 k	RESC1608L	Resistor
2	R12, R14		CRGCQ0603F2K2	2.2 k	RESC1608L	Resistor
1	C12	TDK	C2012X7R1C225K125AB	2.2 μ	CAPC2012N	Capacitor
1	C19	TDK	C2012X7R1C225K125AB	2.2 μ	CAPC2012N	Capacitor
1	J8	Wurth Electronics	61300621121	2.54 mm THT Dual Pin Header, 6p	61300621121	Board−To−Board Connector, Vertical, 2.54 mm, 6 Contacts, Header, WR−PHD Series, Through Hole
3	R18, R21, R22		CRG0603F4K7	4k7	RESC1608L	Resistor
1	C14	TDK	CGA3E2X7R1H472M080AA	4.7 n	CAPC1608L	Capacitor
1	C37	TDK	C1608X7R2A472K080AA	4.7 n	CAPC1608L	Capacitor
1	L2	Wurth Electronics	7427922808	8 Ω @ 100 MHz	WE−MPSB_0603	WE−MPSB EMI Multilayer Power Suppression Bead, size 0603, 8 Ω @ 100MHz
5	R10, R17, R19, R32, R39		CRGCQ0603F10K	10 k	RESC1608L	Resistor
3	C20, C21, C22	TDK	CGA3E2X7R1H103K080AA	10 n	CAPC1608L	Capacitor
1	R37		CPF0603F20KC1	20 k	RESC1608L	Resistor
2	C38, C40	KEMET	C1206C226K9PACTU	22 μ	CAPC3216N	Capacitor
1	C6	Nichicon	UVR2A220MED	22 μF	CAPPR2.5−6.3x11	Capacitor
1	D10	ON Semiconductor	NSPM0051MUT5G	30 kV ESD 70 A 8/20 μs Surge	Case 517CZ	Transient Voltage Suppressors
1	R38		CRGCQ0603F33R	33E	RESC2012L	Resistor
2	R4, R8		CRGCQ0603F33K	33 k	RESC1608L	Resistor
1	R16		CRGH0603F39K	39 k	RESC1608L	Resistor
1	R35		CRGCQ0603F47K	47 k	RESC1608L	Resistor
2	C39, C41	KEMET	C1210C476M9PAC	47 μF	CAPC3225N	Capacitor
1	C7	KEMET	A759MS566M1KAAE045	56 μF	CAPPR5−10x12.5	Capacitor
1	Q6	ON Semiconductor	NVTFS6H888N	80 V, 13 A, 55 mΩ	MKT−MLP08T	Power MOSFET 80 V, 55 m, 13 A, Single N−Channel
1	Q7		FDMA037N08LC	80 V, 6 A, 36.5 mΩ	Case 511DB	MOSFET FET 80 V 3.7 MΩ MLP33

Table 1. BILL OF MATERIAL (continued)

4	R25, R26, R29, R30		CRGCQ0603F100R	100 E	RESC1608L	Resistor
1	P1	Vishay	TS53YJ103MR10	100 k	TS53YJ	5 mm Square Surface Mount Miniature Trimmers Single−Turn Cermet Sealed 5 K 250 mW 35.4 V 20%
5	R1, R2, R3, R9, R43		CRGCQ0603F100K	100 k	RESC1608L	Resistor
1	R40		LVM25FVR100E−TR	100 m	RESC6332N	Resistor
1	R11		CRA2512−FZ−R100 ELF	100 m 1% 3 W	RESC6332N	Resistor
3	C11, C18, C23	AVX	06033C104KAT4A	100 n	CAPC1608L	Capacitor
4	C8, C9, C28, C33	TDK	C2012X7R2A104K12 5AA	100 n	CAPC2012L	Capacitor

onsemi, onsemi, and other names, marks, and brands are registered and/or common law trademarks of Semiconductor Components Industries, LLC dba "**onsemi**" or its affiliates and/or subsidiaries in the United States and/or other countries. **onsemi** owns the rights to a number of patents, trademarks, copyrights, trade secrets, and other intellectual property. A listing of **onsemi's** product/patent coverage may be accessed at www.onsemi.com/site/pdf/Patent−Marking.pdf. **onsemi** is an Equal Opportunity/Affirmative Action Employer. This literature is subject to all applicable copyright laws and is not for resale in any manner.

The evaluation board/kit (research and development board/kit) (hereinafter the "board") is not a finished product and is not available for sale to consumers. The board is only intended for research, development, demonstration and evaluation purposes and will only be used in laboratory/development areas by persons with an engineering/technical training and familiar with the risks associated with handling electrical/mechanical components, systems and subsystems. This person assumes full responsibility/liability for proper and safe handling. Any other use, resale or redistribution for any other purpose is strictly prohibited.

THE BOARD IS PROVIDED BY onsemi TO YOU "AS IS" AND WITHOUT ANY REPRESENTATIONS OR WARRANTIES WHATSOEVER. WITHOUT LIMITING THE FOREGOING, onsemi (AND ITS LICENSORS/SUPPLIERS) HEREBY DISCLAIMS ANY AND ALL REPRESENTATIONS AND WARRANTIES IN RELATION TO THE BOARD, ANY MODIFICATIONS, OR THIS AGREEMENT, WHETHER EXPRESS, IMPLIED, STATUTORY OR OTHERWISE, INCLUDING WITHOUT LIMITATION ANY AND ALL REPRESENTATIONS AND WARRANTIES OF MERCHANTABILITY, FITNESS FOR A PARTICULAR PURPOSE, TITLE, NON−INFRINGEMENT, AND THOSE ARISING FROM A COURSE OF DEALING, TRADE USAGE, TRADE CUSTOM OR TRADE PRACTICE.

onsemi reserves the right to make changes without further notice to any board.

You are responsible for determining whether the board will be suitable for your intended use or application or will achieve your intended results. Prior to using or distributing any systems that have been evaluated, designed or tested using the board, you agree to test and validate your design to confirm the functionality for your application. Any technical, applications or design information or advice, quality characterization, reliability data or other services provided by **onsemi** shall not constitute any representation or warranty by **onsemi**, and no additional obligations or liabilities shall arise from **onsemi** having provided such information or services.

onsemi products including the boards are not designed, intended, or authorized for use in life support systems, or any FDA Class 3 medical devices or medical devices with a similar or equivalent classification in a foreign jurisdiction, or any devices intended for implantation in the human body. You agree to indemnify, defend and hold harmless **onsemi**, its directors, officers, employees, representatives, agents, subsidiaries, affiliates, distributors, and assigns, against any and all liabilities, losses, costs, damages, judgments, and expenses, arising out of any claim, demand, investigation, lawsuit, regulatory action or cause of action arising out of or associated with any unauthorized use, even if such claim alleges that **onsemi** was negligent regarding the design or manufacture of any products and/or the board.

This evaluation board/kit does not fall within the scope of the European Union directives regarding electromagnetic compatibility, restricted substances (RoHS), recycling (WEEE), FCC, CE or UL, and may not meet the technical requirements of these or other related directives.

FCC WARNING − This evaluation board/kit is intended for use for engineering development, demonstration, or evaluation purposes only and is not considered by **onsemi** to be a finished end product fit for general consumer use. It may generate, use, or radiate radio frequency energy and has not been tested for compliance with the limits of computing devices pursuant to part 15 of FCC rules, which are designed to provide reasonable protection against radio frequency interference. Operation of this equipment may cause interference with radio communications, in which case the user shall be responsible, at its expense, to take whatever measures may be required to correct this interference.

onsemi does not convey any license under its patent rights nor the rights of others.

LIMITATIONS OF LIABILITY: **onsemi** shall not be liable for any special, consequential, incidental, indirect or punitive damages, including, but not limited to the costs of requalification, delay, loss of profits or goodwill, arising out of or in connection with the board, even if **onsemi** is advised of the possibility of such damages. In no event shall **onsemi's** aggregate liability from any obligation arising out of or in connection with the board, under any theory of liability, exceed the purchase price paid for the board, if any.

The board is provided to you subject to the license and other terms per **onsemi's** standard terms and conditions of sale. For more information and documentation, please visit www.onsemi.com.

PUBLICATION ORDERING INFORMATION

LITERATURE FULFILLMENT:
Email Requests to: orderlit@onsemi.com

onsemi Website: www.onsemi.com

TECHNICAL SUPPORT
North American Technical Support:
Voice Mail: 1 800−282−9855 Toll Free USA/Canada
Phone: 011 421 33 790 2910

Europe, Middle East and Africa Technical Support:
Phone: 00421 33 790 2910
For additional information, please contact your local Sales Representative